# MODULE IV DIODES AND THEIR APPLICATIONS

PN Junction diodes – Construction, VI Characteristics - Rectifiers: Half wave, Full wave - clippers, clampers - Zener Diode as Voltage regulator- Load and line regulation- Diode protection circuits- Light Emitting Diode

## PN Junction diode

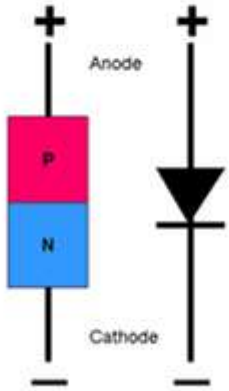


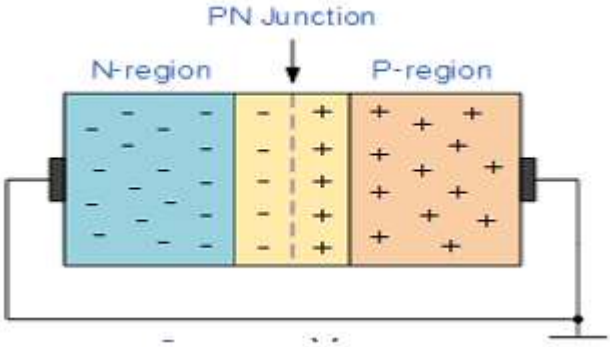


## FORWARD BIAS

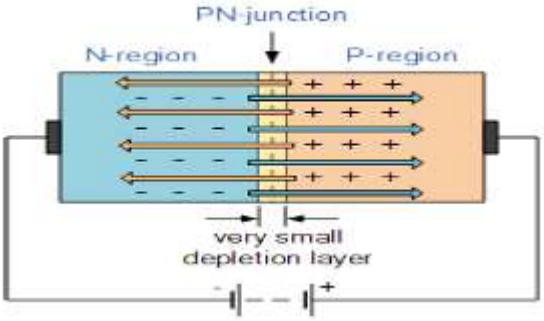

## REVERSE BIAS

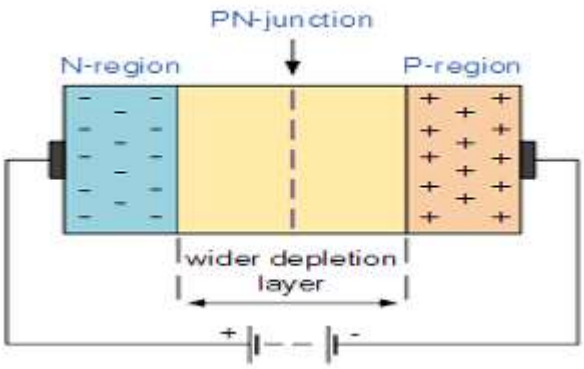


## V-I CHARACTERISTIC OF PN JUNCTION DIODE

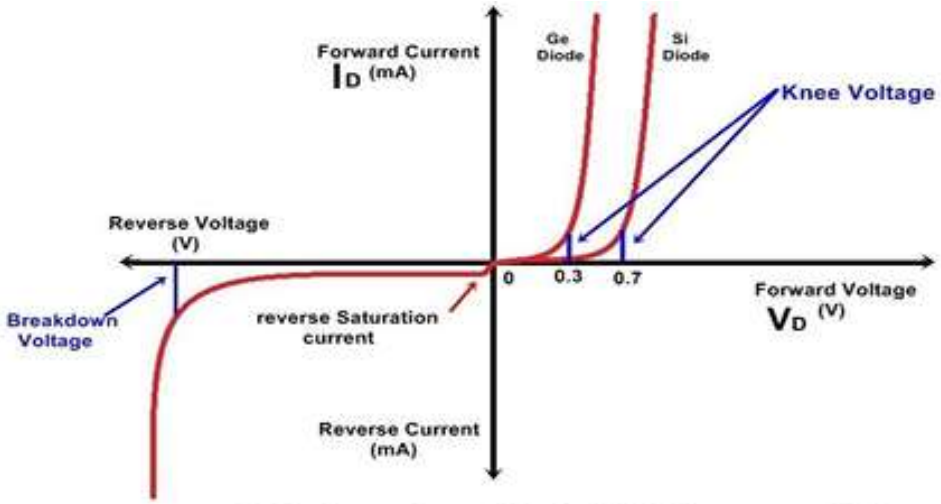


P-N Junction Diode V-I Characteristics

## APPLICATION:

✓ **Rectifier circuit**

✓ **Clipping and clamping circuit**

✓ **Voltage multiplier**

✓ **AM detector**

## Rectifiers: Half wave, Full wave - clippers, clampers

## PN DIODE CLIPPING CIRCUIT

## POSITIVE CLIPPER

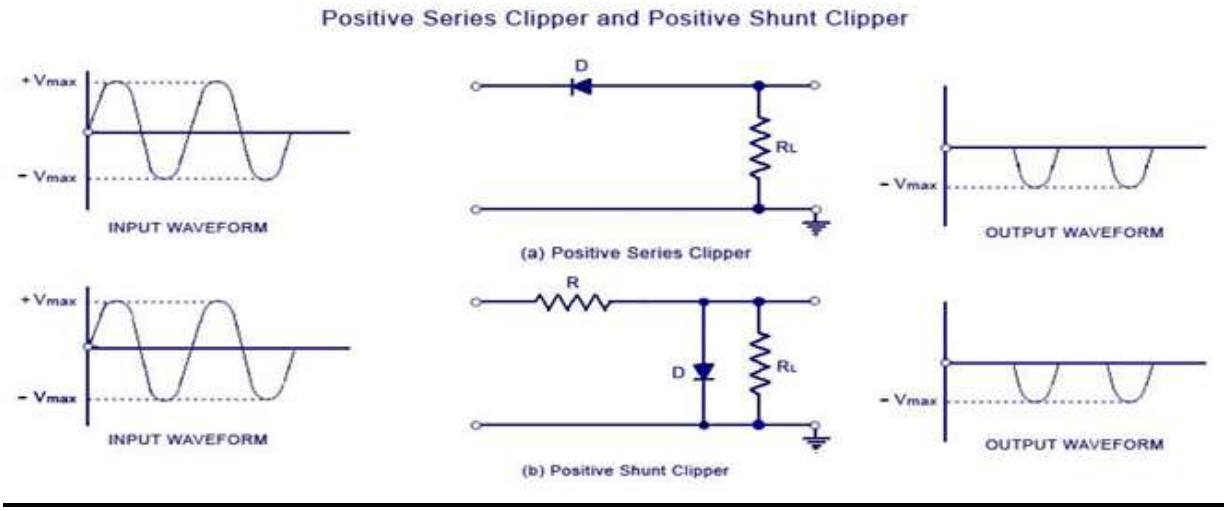


## NEGATIVE CLIPPER

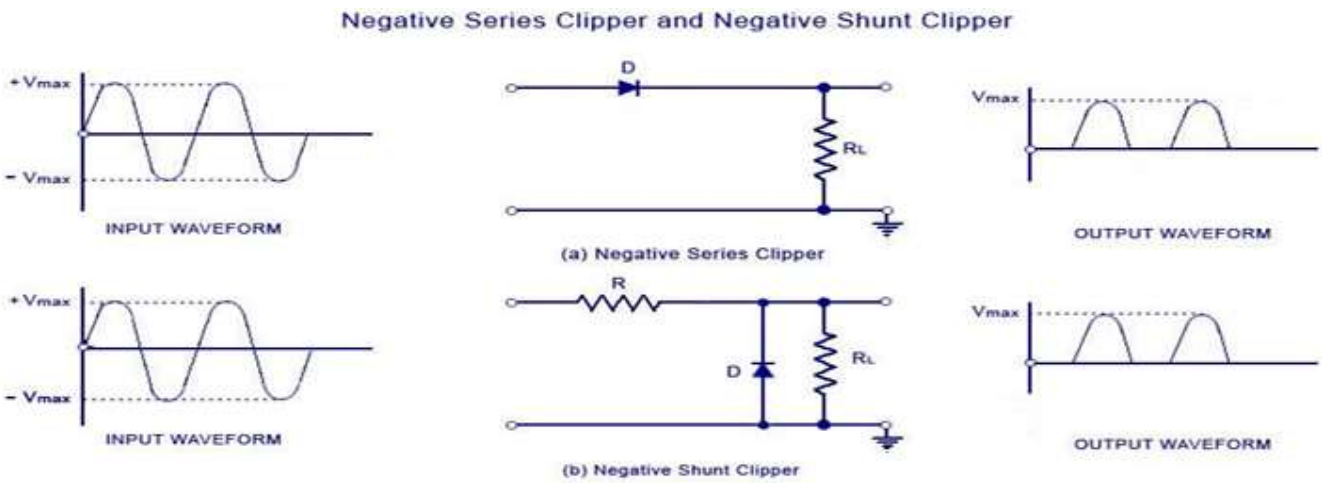

## APPLICATIONS

✓ Used in FM transmitter to reduce noise.

✓ Used in Changing the shape of a wave

✓ Used to limit the voltage input to a device

✓ Used in Circuit transient protection

✓ Used in television circuit

## CLAMPER CIRCUIT

## POSITIVE CLAMPER

➢ Positive clamper is a circuit which clamps the input signal waveform positively.

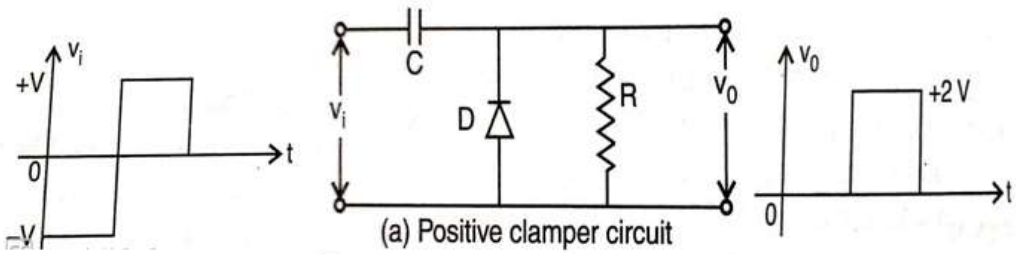


(a) Positive clamper circuit

## NEGATIVE CLAMPER

➢ Negative clamper is a circuit which clamps the input signal waveform negatively.

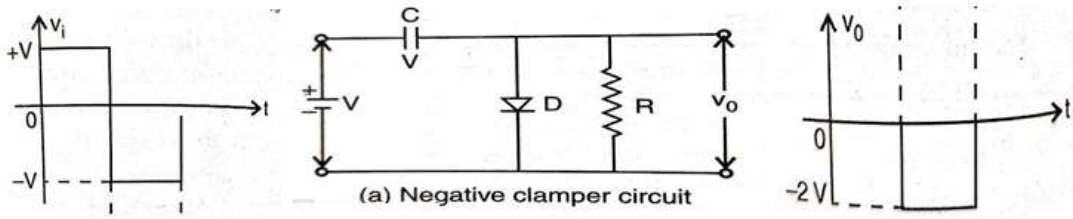


(a) Negative clamper circuit

## APPLICATIONS

✓ Used as test equipment

✓ Used for protection of amplifier

✓ Used to remove distortions

✓ Used as voltage amplifier

# RECTIFIER CIRCUITS

**CLASSIFICATION**

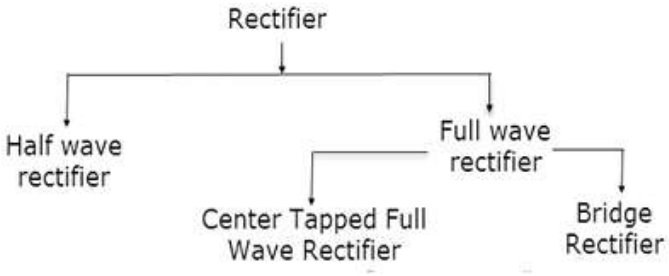


## HALF WAVE RECTIFIER

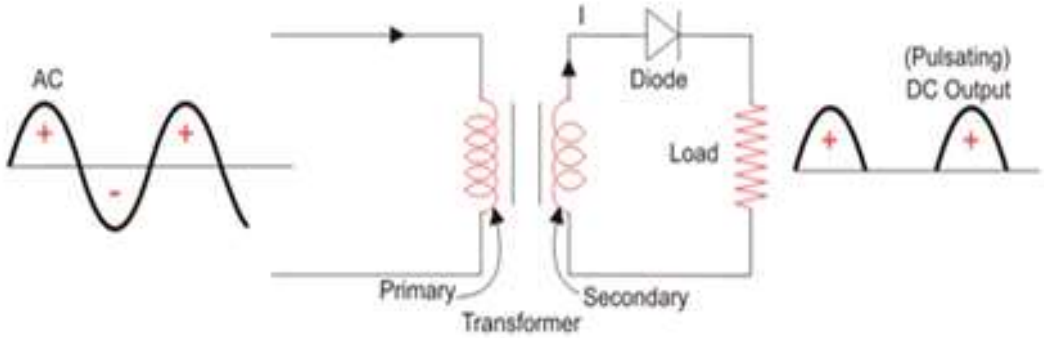


## FULLWAVE RECTIFIER

### CENTER TAP FULL WAVE RECTIFIER

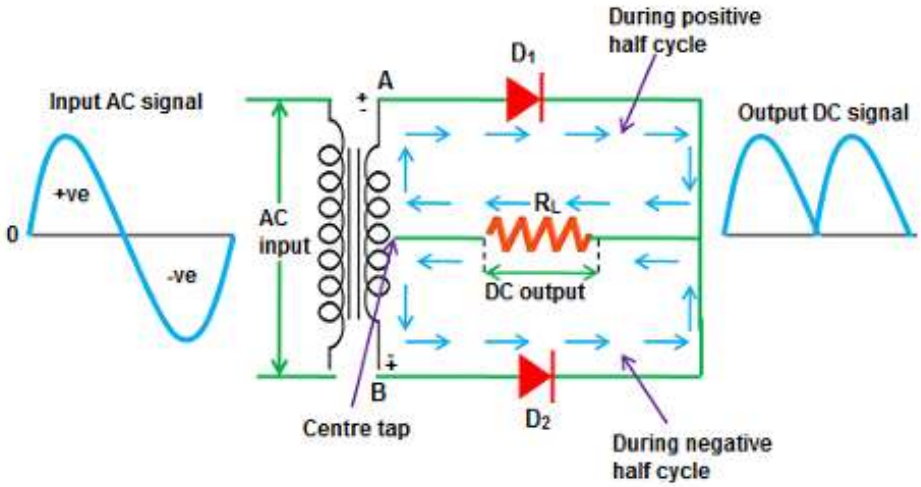

# BRIDGE TYPE FULL WAVE RECTIFIER

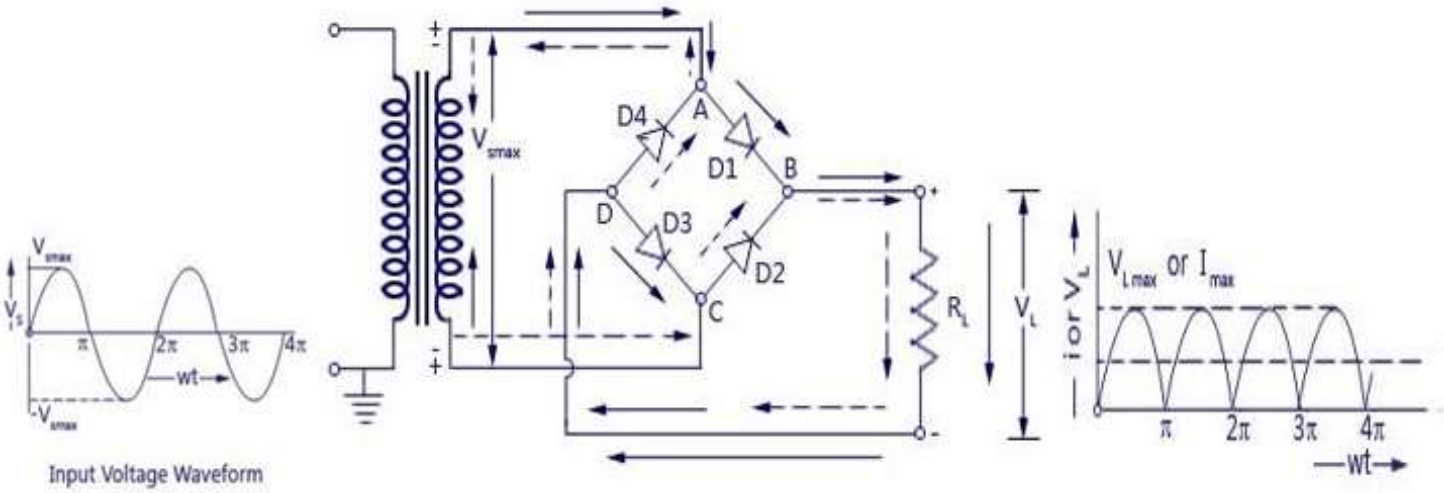


---

## Zener Diode

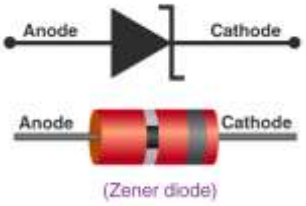


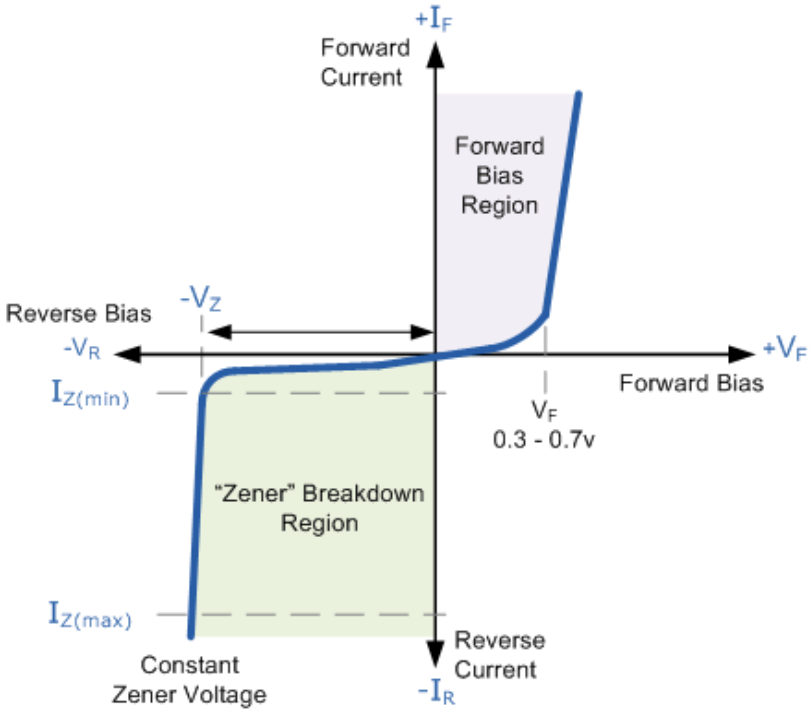

## Zener Diode as a Voltage Regulator

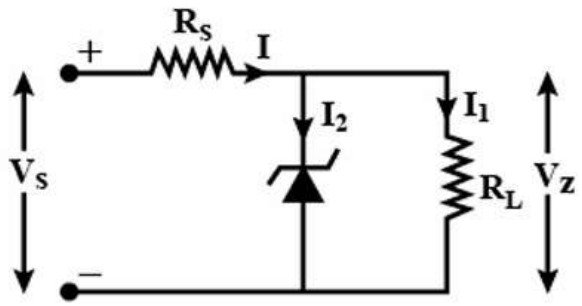


Zender diode as a voltage regulator

### Applications of Zener Diodes

- **Voltage regulation in power supplies.**
- **Overvoltage protection for sensitive electronic components.**
- **Voltage clamping and level shifting circuits.**
- **Voltage reference circuits.**
- **Signal limiting and clipping circuits.**

## Light Emitting Diode

### Light Emitting Diodes I-V Characteristics

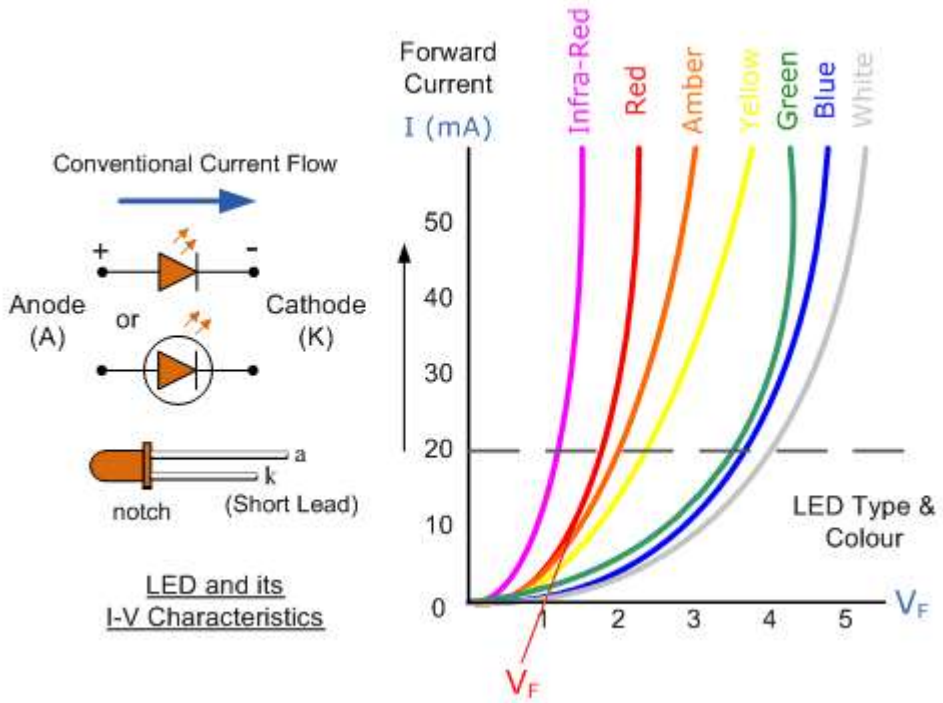

## Light Emitting Diode Colours

| Typical LED Characteristics | | | |
|---|---|---|---|
| Semiconductor Material | Wavelength | Colour | $V_F$ @ 20mA |
| GaAs | 850-940nm | Infra-Red | 1.2v |
| GaAsP | 630-660nm | Red | 1.8v |
| GaAsP | 605-620nm | Amber | 2.0v |
| GaAsP:N | 585-595nm | Yellow | 2.2v |
| AlGaP | 550-570nm | Green | 3.5v |
| SiC | 430-505nm | Blue | 3.6v |
| GaInN | 450nm | White | 4.0v |

## Types of Light Emitting Diode

- Gallium Arsenide (GaAs) – infra-red
- Gallium Arsenide Phosphide (GaAsP) – red to infra-red, orange
- Aluminium Gallium Arsenide Phosphide (AlGaAsP) – high-brightness red, orange-red, orange, and yellow
- Gallium Phosphide (GaP) – red, yellow and green
- Aluminium Gallium Phosphide (AlGaP) – green
- Gallium Nitride (GaN) – green, emerald green
- Gallium Indium Nitride (GaInN) – near ultraviolet, bluish-green and blue
- Silicon Carbide (SiC) – blue as a substrate
- Zinc Selenide (ZnSe) – blue
- Aluminium Gallium Nitride (AlGaN) – ultraviolet

# Seven Segment LED Display

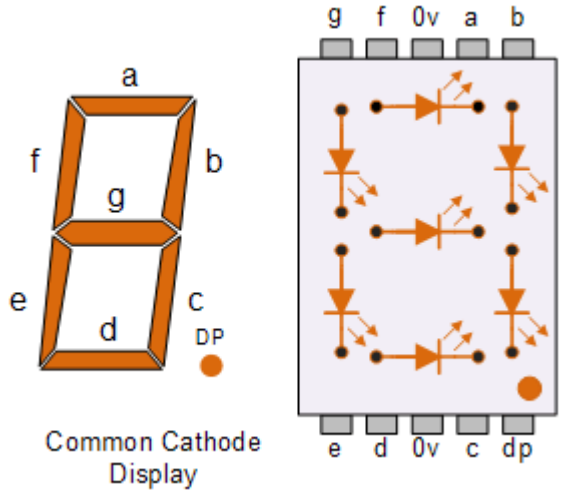


## Applications of Light Emitting Diodes

There are many applications of the LED and some of them are explained below.

∗ LED is used as a bulb in the homes and industries

∗ The light emitting diodes are used in the motorcycles and cars

∗ These are used in the mobile phones to display the message

∗ At the traffic light signals led's are used

## Advantages of LED's

∗ The cost of LED's is less and they are tiny.

∗ By using the LED's the electricity is controlled.

∗ The intensity of the LED differs with the help of the microcontroller.